Oven

User manual

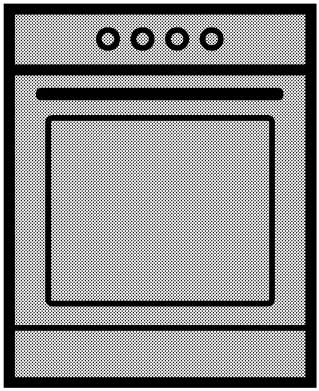

KA52NEK
KA52NEW
KA52NES

EN

485.3016.90/R.AA/10.07.2017

Please read this user manual first!

Dear Customer,
Thank you for purchasing this Beko product. We hope that you get the best results from your product which has been manufactured with high quality and state-of-the-art technology. Therefore, please read this entire user manual and all other accompanying documents carefully before using the product and keep it as a reference for future use. If you handover the product to someone else, give the user manual as well. Follow all warnings and information in the user manual.
Remember that this user manual is also applicable for several other models. Differences between models will be identified in the manual.

Explanation of symbols

Throughout this user manual the following symbols are used:

	Important information or useful hints about usage.
	Warning of hazardous situations with regard to life and property.
	Warning of electric shock.
	Warning of risk of fire.
	Warning of hot surfaces.

Arçelik A.Ş.
Karaağaç caddesi No:2-6
34445 Sütlüce/Istanbul/TURKEY
Made in TURKEY

CE

This product was manufactured using the latest technology in environmentally friendly conditions.

1 Important instructions and warnings for safety and environment 4

Intended use 4
General safety 4
Safety when working with gas....5
Electrical safety 6
Product safety 7
Safety for children....9
Disposing of the old product 10
Package information 10

2 General information 11

Overview 11
Package contents 12
Technical specifications 13
Injector table 13

3 Installation 14

Before installation 14
Installation and connection 15
Gas conversion 18
Future Transportation....20

4 Preparation 21

Tips for saving energy 21
Initial use....21
First cleaning of the appliance 21
Initial heating....21

5 How to use the hob 22

General information about cooking 22
Using the hobs 22

6 How to operate the oven 24

General information on baking, roasting and grilling24
How to use the gas oven.... 24
Cooking times table.... 25
Using the clock as an alarm 26
How to use the gas grill 26
Using of grill pan 27

7 Maintenance and care 28

General information.... 28
Cleaning the hob 28
Cleaning the control panel 28
Cleaning the oven 28
Removing the oven door 29
Removing the door inner glass 29
Replacing the oven lamp.... 30

8 Troubleshooting 31

9 Guarantee Details 32

1 Important instructions and warnings for safety and environment

This section contains safety instructions that will help protect from risk of personal injury or property damage. Failure to follow these instructions shall void any warranty.

Intended use

CAUTION

- This appliance is designed for cooking food (baking, roasting, grilling of food and defrosting) and is intended for indoor domestic household and static home use only.
- This appliance should not be used for any other purpose or in any other application, such as for non-domestic use or in a commercial environment.
- In addition this appliance is not suitable for use on any type of boat (offshore, inland waterway, canal boat or houseboat), caravans or motor homes. Installation in static caravans and mobile homes is permitted.
- Incorrect installation environments will void the guarantee.
- This appliance should not be used for warming plates under the grill, drying towels, dish cloths etc. by hanging them on the oven door handles or for room heating purposes.
- The manufacturer shall not be liable for any damage caused by improper use or handling.

General safety

- This appliance can be used by children aged from 8 years and above and persons with reduced physical, sensory or mental capabilities or lack of experience and knowledge if they have been given supervision or instruction concerning use of the appliance in a safe way and understand the hazards involved.
  Children shall not play with the appliance. Cleaning and user maintenance shall not be made by children without supervision.
- The appliance is not to be used by persons (including children) with reduced physical, sensory or mental capabilities, or lack of experience and knowledge, unless they have been given supervision or instruction. Children should be supervised and ensure they do not play with the appliance
- If the product is handed over to someone else for personal use or second-hand use purposes, the

user manual, product labels and other relevant documents and parts should be also given.

- Never place the product on a carpet-covered floor. Otherwise, lack of airflow beneath the product will cause electrical parts to overheat. This will cause problems with your product.
- Installation and repair procedures must always be performed by Authorized Service Agents. The manufacturer shall not be held responsible for damages arising from procedures carried out by unauthorized persons which may also void the warranty. Before installation, read the instructions carefully.
- Do not operate the product if it is defective or has any visible damage.
- Ensure that the product function knobs are switched off after every use.

Safety when working with gas

- Any works on gas equipment and systems may only be carried out by authorised qualified persons who are Gas Safe registered.
- Prior to the installation, ensure that the local distribution conditions (nature of the gas and gas pressure) and the adjustment of the appliance are compatible.
- This appliance is not connected to a combustion products or evacuation device. It shall be installed and connected in accordance with current installation regulations. Particular attention shall be given to the relevant requirements regarding ventilation; See *Before installation, page 14*
- The use of gas cooking appliance results in the production of heat and moisture in the room in which it is installed. Ensure that the kitchen is well ventilated: keep natural ventilation holes open or install a mechanical ventilation device (mechanical extractor hood). Prolonged intensive use of the appliance may call for additional ventilation, for example increasing the level of the mechanical ventilation where present.
- Gas appliances and systems must be regularly checked for proper functioning. Regulator, hose and its clamp must be checked regularly and replaced within the periods recommended by its manufacturer or when necessary.
- Clean the gas burners regularly. The flames should be blue and burn evenly.
- Good combustion is required in gas appliances. In case of

incomplete combustion, carbon monoxide (CO) might develop. Carbon monoxide is a colourless, odourless and very toxic gas, which has a lethal effect even in very small doses.

- Request information about gas emergency telephone numbers and safety measures in case of gas smell from you local gas provider.

What to do when you smell gas

- Do not use open flame or do not smoke. Do not operate any electrical buttons (e.g. lamp button, door bell and etc.) Do not use fixed or mobile phones. Risk of explosion and toxication!
- Open doors and windows.
- Turn off all valves on gas appliances and gas meter at the main control valve, unless it's in a confined space or cellar.
- Check all tubes and connections for tightness. If you still smell gas leave the property.
- Warn the neighbours.
- Call the fire-brigade. Use a telephone outside the house.
- Call the Gas Emergency Services immediately on 0800 111 999. If you have door or gates that are secured by an electric lock, or entry phone, please open these manually.
- Do not re-enter the property until you are told it is safe to do so.

Electrical safety

- If the product has a failure, it should not be operated unless it is repaired by an Authorized Service Agent. There is the risk of electric shock!
- Only connect the product to a grounded outlet/line with the voltage and protection as specified in the “Technical specifications”. Have the grounding installation made by a qualified electrician while using the product with or without a transformer. Our company shall not be liable for any problems arising due to the product not being earthed in accordance with the local regulations.
- Never wash the product by spreading or pouring water onto it! There is the risk of electric shock!
- Never touch the plug with wet hands! Never unplug by pulling on the cable, always pull out by holding the plug.
- The product must be disconnected during installation, maintenance, cleaning and repairing procedures.
- If the power connection cable for the product is damaged, it must be replaced by the manufacturer, its service agent or similarly

qualified persons in order to avoid a hazard.

- The appliance must be installed so that it can be completely disconnected from the mains supply. The separation must be provided by a switch built into the fixed electrical installation, according to construction regulations.
- Rear surface of the oven gets hot when it is in use. Make sure that the gas/electrical connection does not contact the rear surface; otherwise, connections can get damaged.
- Do not trap the mains cable between the oven door and frame and do not route it over hot surfaces. Otherwise, cable insulation may melt and cause fire as a result of short circuit.
- Any work on electrical equipment and systems should only be carried out by authorized and qualified persons.
- In case of any damage, switch off the product and disconnect it from the mains. To do this, turn off the fuse at home.
- Make sure that fuse rating is compatible with the product.

Product safety

- WARNING: The appliance and its accessible parts become hot during use. Care should be taken to avoid touching heating elements. Children less than 8 years of age shall be kept away unless continuously supervised.
- Never use the product when your judgment or coordination is impaired by the use of alcohol and/or drugs.
- Be careful when using alcoholic drinks in your dishes. Alcohol evaporates at high temperatures and may cause fire since it can ignite when it comes into contact with hot surfaces.
- Food Poisoning Hazard: Do not let food sit in oven for more than 1 hour before or after cooking. Doing so can result in food poisoning or sickness.
- Do not place any flammable materials close to the product as the sides may become hot during use.
- During use the appliances becomes hot. Care should be taken to avoid touching heating elements inside the oven.
- Keep all ventilation slots clear of obstructions.
- Do not heat closed tins and glass jars in the oven. The pressure that would build-up in the tin/jar may cause it to burst.
- Do not place baking trays, dishes or aluminium foil directly onto the bottom of the oven. The heat

accumulation might damage the bottom of the oven.

- Do not use harsh abrasive cleaners or sharp metal scrapers to clean the oven door glass since they can scratch the surface, which may result in shattering of the glass.
- Do not use steam cleaners to clean the appliance as this may cause an electric shock.
- (Varies depending on the product model.)
  Placing the wire shelf and tray onto the wire racks properly
  It is important to place the wire shelf and/or tray onto the rack properly. Slide the wire shelf or tray between 2 rails and make sure that it is balanced before placing food on it (Please see the following figure).

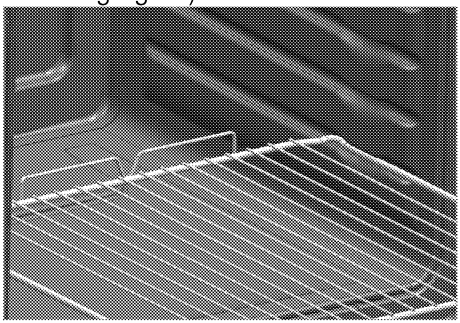

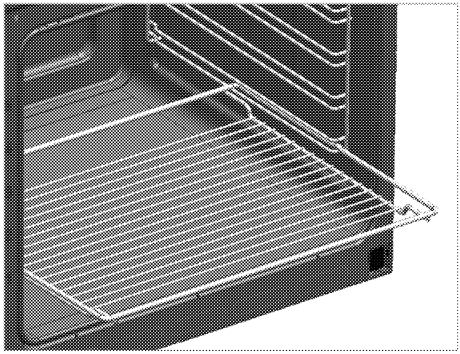

- Do not use the product if the front door glass removed or cracked.
- Do not use the oven handle to hang towels for drying. Do not hang up towel, gloves, or similar textile products when the grill function is at open door.
- Always use heat resistant oven gloves when putting in or removing dishes into/from the hot oven.
- Place the baking paper into the cooking pot or on to the oven accessory (tray, wire grill etc) together with the food and then insert all into the preheated oven. Remove the excess parts of the baking paper overflowing from the accessory or the pot in order to prevent the risk of touching the oven's heating elements. Never use the baking paper in an operating temperature higher than the indicated value for the baking paper. Do not place the baking paper directly on the base of the oven.

- WARNING: Ensure that the appliance is switched off before replacing the lamp to avoid the possibility of electric shock.
- The appliance must not be installed behind a decorative door in order to avoid overheating.
- Product must be placed directly on the floor. It must not be placed onto a base or a pedestal.
- WARNING: Unattended cooking on a hob with fat or oil can be dangerous and may result in fire. NEVER try to extinguish a fire with water, but switch off the appliance and then cover flame e.g. with a lid or a fire blanket.
- CAUTION: The cooking process has to be supervised. A short term cooking process has to be supervised continuously.
- WARNING: Danger of fire: Do not store items on the cooking surfaces.

Prevention against possible fire risk!

- Ensure all electrical connections are secure and tight to prevent risk of arcing.
- Do not use damaged cables or extension cables.
- Ensure liquid or moisture is not accessible to the electrical connection point.
- To prevent gas leakage ensure that the gas connection is sound.

Safety for children

- WARNING: Accessible parts may become hot during use. Young children should be kept away.
- The packaging materials will be dangerous for children. Keep the packaging materials away from children. Please dispose of all parts of the packaging according to environmental standards.
- Electrical and/or gas products are dangerous to children. Keep children away from the product when it is operating and do not allow them to play with the product.
- An additional protective means to avoid contact with the oven door is available. This part should be fitted when young children are likely to be present.
- Do not place any items above the appliance that children may reach for.
- When the door is open, do not load any heavy object on it and do not allow children to sit on it. It may overturn or door hinges may get damaged.

Disposing of the old product

Compliance with the WEEE Directive and Disposing of the Waste Product:

This product complies with EU WEEE Directive (2012/19/EU). This product bears a classification symbol for waste electrical and electronic equipment (WEEE).
This product has been manufactured with high quality parts and materials which can be reused and are suitable for recycling. Do not dispose of the waste product with normal domestic and other wastes at the end of its service life. Take it to the collection center for the recycling of electrical and electronic equipment. Please consult your local authorities to learn about these collection centers.

Compliance with RoHS Directive:

The product you have purchased complies with EU RoHS Directive (2011/65/EU). It does not contain harmful and prohibited materials specified in the Directive.

Package information

- Packaging materials of the product are manufactured from recyclable materials in accordance with our National Environment Regulations. Do not dispose of the packaging materials together with the domestic or other wastes. Take them to the packaging material collection points designated by the local authorities.

2 General information

Overview

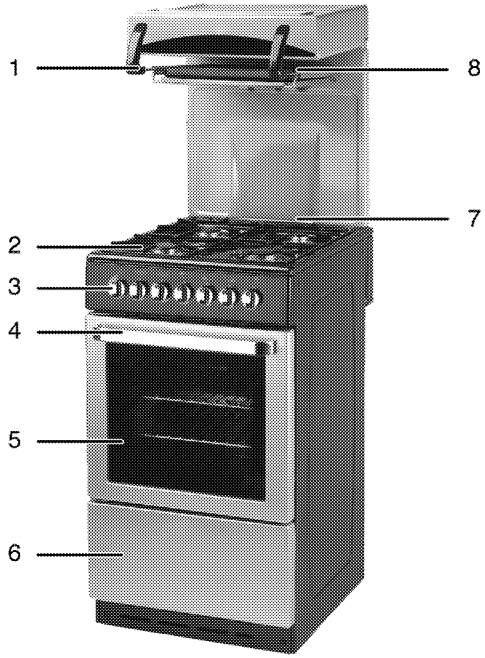

1	Grill pan	5	Door
2	Burner plate	6	Lower part
3	Control panel	7	Integral air grill
4	Handle	8	Integral air rack

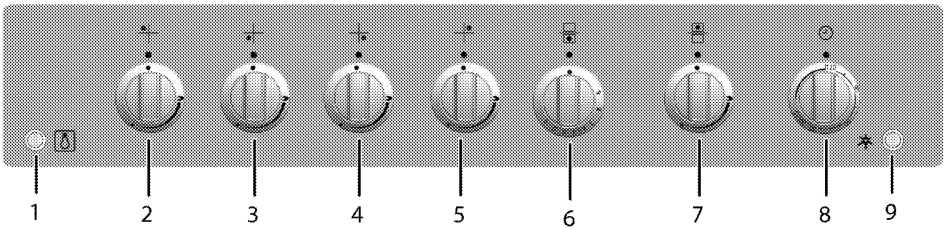

1	Lamp button	6	Main oven thermostat knob
2	Normal burner Rear left	7	Grill thermostat knob
3	Rapid burner Front left	8	Mechanical timer
4	Auxiliary burner Front right	9	Ignition button
5	Normal burner Rear right		

Package contents

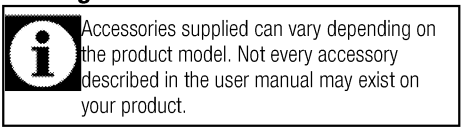

Accessories supplied can vary depending on the product model. Not every accessory described in the user manual may exist on your product.

1. **User manual**
2. **Wire Shelf**
   Used for roasting and for placing the food to be baked, roasted or cooked in casserole dishes to the desired rack.

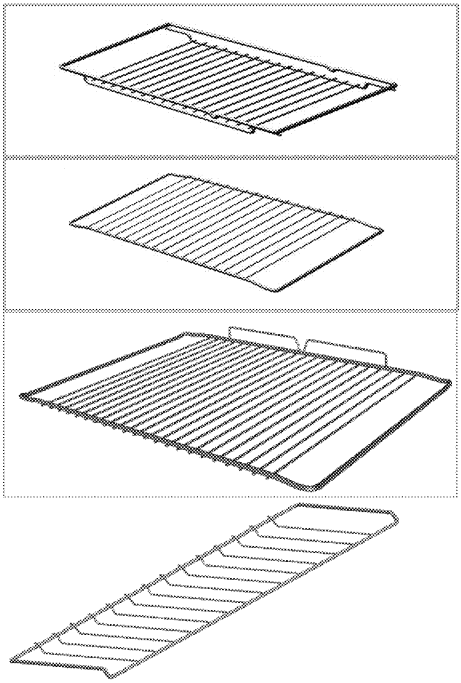

3. **Placing the wire shelf and tray onto the telescopic racks properly**
   (This feature is optional. It may not exist on your product.)
   Telescopic racks allow you to install and remove the trays and wire shelf easily.
   When using the tray and wire shelf with telescopic racks, make sure that the pins at the rear section of the telescopic rack stands against the edges of the wire shelf and tray.

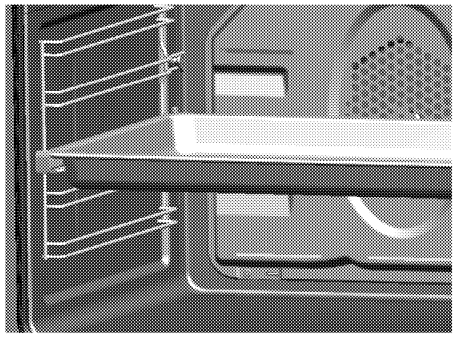

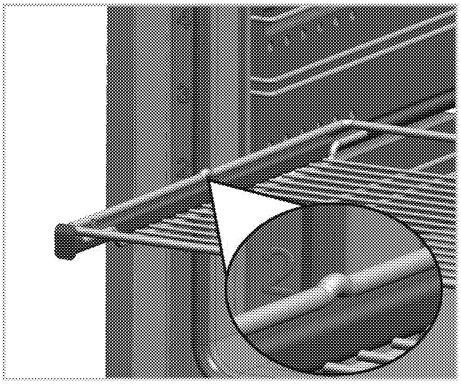

4. **Wire shelf shield metal**
   Can be used for roasting and as deposit for baking, roasting and casserole dishes. In order to get best cooking performance it should be used together with the wire shelf shield metal on the rear side.

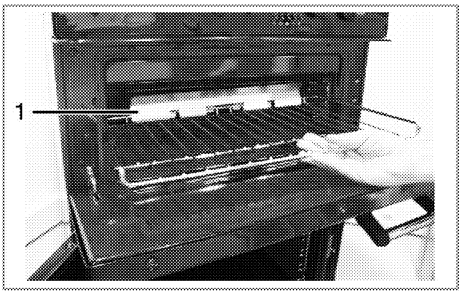

1 Metal shield

Metal shield should be attached on the rear-upper side of wire shelf. Use the wire shelf as its bended side positioned on the front of the cavity and turned downside.

Technical specifications

GENERAL	
External dimensions (height / width / depth)	1460 mm/500 mm/600 mm
Voltage / frequency	220-240 V ~ 50 Hz
Fuse	13 A
Cable type / section	min.H05VV-FG 3 x 0,75 mm^2 or equivalent
Category of gas product	II **2H3+**
Gas type / pressure	NG G 20/20 mbar
Total gas consumption	12,9 kW
Converting the gas type / pressure[§]	LPG G 30/28-30 mbar
– optional	Propane 31/37 mbar
HOB	
Burners	
Rear left	**Normal burner**
Power	2.0 kW
Front left	**Rapid burner**
Power	2.9 kW
Front right	**Auxiliary burner**
Power	1.0 kW
Rear right	**Normal burner**
Power	2.0 kW
OVEN/GRILL	
Main oven	**Gas oven**
Inner lamp	15–25 W
Gas consumption of oven	2.5 kW
Grill power consumption	2.5 kW

Technical specifications may be changed without prior notice to improve the quality of the product.

Figures in this manual are schematic and may not exactly match your product.

Values stated on the product labels or in the documentation accompanying it are obtained in laboratory conditions in accordance with relevant standards. Depending on operational and environmental conditions of the product, these values may vary.

Injector table

Position hob zone Gas type / Gas pressure	2.0 kW Rear left	2.9 kW Front left	1.0 kW Front right	2.0 kW Rear right
G 20/20 mbar	103	115	72	103
G 30/28-30 mbar	72	87	50	72
G 31/ 37 mbar	72	87	50	72

Gas type / Gas pressure	Grill	Gas oven
G 20/20 mbar	119	115
G 30/28-30 mbar	81	78
G 31/ 37 mbar	81	78

3 Installation

Product must be installed by a qualified person in accordance with the regulations in force. The manufacturer shall not be held responsible for damages arising from procedures carried out by unauthorized persons which may also void the warranty.

Preparation of location and electrical and gas installation for the product is under the installer's responsibility.

DANGER:
The product must be installed in accordance with all local gas and/or electrical regulations.

DANGER:
Prior to installation, visually check if the product has any defects on it. If so, do not have it installed.
Damaged products cause risks for your safety.

Before installation

To ensure that critical air gaps are maintained under the appliance, we recommend that this appliance is mounted on a solid base and that the feet do not sink into any carpet or soft flooring.
The kitchen floor must be able to carry the weight of the appliance plus the additional weight of cookware and bakeware and food.
If the range is placed on a base, measures have to be taken to prevent the appliance slipping from the base.
The appliances must not be installed behind a decorative door in order to avoid overheating.

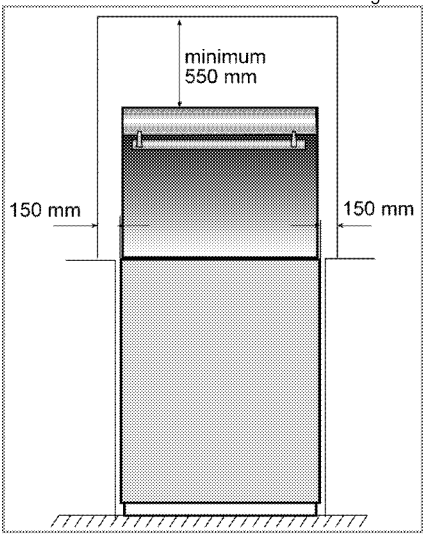

- It can be used with cabinets on either side but in order to have a minimum distance of 400mm above hotplate level allow a side clearance of 65mm between the appliance and any wall, partition or tall cupboard.
- It can also be used in a free standing position. Allow a minimum distance of 750 mm above the hob surface.
- (*) If a cooker hood is to be installed above the cooker, refer to cooker hood manufacturer' instructions regarding installation height (min 650 mm).
- The appliance corresponds to device class 1, i.e. it may be placed with the rear and **one** side to kitchen walls, kitchen furniture or equipment of any size. The kitchen furniture or equipment on the **other** side may only be of the same size or smaller.
- Any kitchen furniture next to the appliance must be heat-resistant (100 °C min.).
- Hot steam escapes at the back of the appliance. The wall behind the appliance must be protected again humidity and dirt.

Safety chain

The appliance must be secured against overbalancing by using the supplied two safety chains on your oven. Fasten hook (1)by using a proper peg to the kitchen wall (6) and connect safety chain (3) to the hook via the locking mechanism (2).

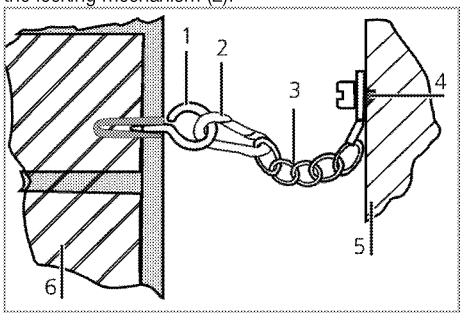

1 Stability hook
2 Locking mechanism
3 Safety chain (supplied and mounted to oven)
4 Firmliy fix chain to cooker rear
5 Rear of cooker
6 Kitchen wall

Stability chain to be as short as practicable to avoid oven tilting forward and diagonal to avoid oven side tilting.

Cooker stability chain for cookers not designed with bracket engagement slot.

Room ventilation

All rooms require an openable window, or equivalent, and some rooms will require a permanent vent as well. The air for combustion is taken from the room air and the exhaust gases are emitted directly into the room. Good room ventilation is essential for safe operation of your appliance.

If the room where the appliance is installed does not have a door or a window that opens directly to the outer environment, there must definitely be a fixed ventilation opening in the room. The fixed ventilation must be nonadjustable and non-closable.

On the doors or windows that open directly to the outer environment, there must be a ventilation opening with the dimensions specified based on the total gas power of the appliance (as shown below). You can find the gas power and ventilation opening match-up in the table below.

Total gas consumption (kW)	min. Ventilation opening (cm^2)
0-2	100
2-3	120
3-4	175
4-6	300
6-8	400
8-10	500
10-11.5	600
11.5-13	700
13-15.5	800
15.5-17	900
17-19	1000
19-24	1250

If the doors or windows that open directly to the outer environment do not have openings corresponding to the ventilation opening specified according to the total gas power of the product, there must definitely be a fixed ventilation opening in the room. The fixed ventilation opening should also be in compliance with the values in the gas power-ventilation opening table. There should be a minimum clearance of 10 mm on the bottom edge of the door -that opens to the inner environment- in the room where the product is installed. You must make sure that items such as carpets, floorings, etc. do not cover this clearance when the door is closed.

The cooker may be located in a kitchen, kitchen/diner or a bed-sitting room, but not in a room containing a bath or shower. The cooker must not be installed in a bed-sitting room of less than $20m^3$.

Do not install this appliance in a room below ground level unless it is open to ground level on at least one side.

Installation and connection

CAUTION

- This appliance is designed for cooking food (baking, roasting, grilling of food and defrosting) and is intended for indoor domestic household and static home use only.
- This appliance should not be used for any other purpose or in any other application, such as for non-domestic use or in a commercial environment.
- In addition this appliance is not suitable for use on any type of boat (offshore, inland waterway, canal boat or houseboat), caravans or motor homes. Installation in static caravans and mobile homes is permitted.
- Incorrect installation environments will void the guarantee.
- This appliance should not be used for warming plates under the grill, drying towels, dish cloths etc. by hanging them on the oven door handles or for room heating purposes.
- The manufacturer shall not be liable for any damage caused by improper use or handling.

Product can only be installed and connected in accordance with the statutory installation rules.

Do not install the product next to refrigerators or freezers. The heat emitted by the product will increase the energy consumption of cooling appliances.

- Carry the product with at least two persons.
- Product must be placed directly on the floor. It must not be placed onto a base or a pedestal.

Do not use the door and/or handle to carry or move the product. The door, handle or hinges get damaged.

Electrical connection

Connect the product to a grounded outlet/line protected by a fuse of suitable capacity as stated in the "Technical specifications" table. Have the grounding installation made by a qualified electrician while using the product with or without a transformer. Our company shall not be liable for any damages that

will arise due to using the product without a grounding installation in accordance with the local regulations.

DANGER:
The product must be connected to the mains supply only by an authorised and qualified person. Manufacturer shall not be held responsible for damages arising from procedures carried out by unauthorised persons.

DANGER:
The power cable must not be clamped, bent or trapped or come into contact with hot parts of the product.
A damaged power cable must be replaced by a qualified electrician. Otherwise, there is risk of electric shock, short circuit or fire!

The mains supply data must correspond to the data specified on the type label of the product. The rating plate is either seen when the door or the lower cover is opened or it is located at the rear wall of the unit depending on the unit type.
Power cable of your product must comply with the values in "Technical specifications" table.

Power cable plug must be within easy reach after installation (do not route it above the hob).

The moulded plug on this appliance incorporates a 13 A fuse. Should the fuse need to be replaced an ASTA approved BS1362 fuse of the same rating must be used. Do not forget to refit the fuse cover. In the event of losing the fuse cover, the plug must not be used until a replacement fuse cover has been fitted. Colour of the replacement fuse cover must be the same colour as that visible on the pin face of the plug. Fuse covers are available from any good electrical store.

- **Fitting a different plug**
  As the colours of the wires in the mains lead of this appliance may not correspond with the coloured markings identifying the terminals on your plug, proceed as follows:
- Brown cable = L (Live)
- Blue cable = N (Neutral)
- Green/yellow cable must be connected to ground (E) ⏚ line.
  With the alternative plugs a 13 A fuse must be fitted either in the plug or adaptor or in the main fuse box. If in doubt contact a qualified electrician.

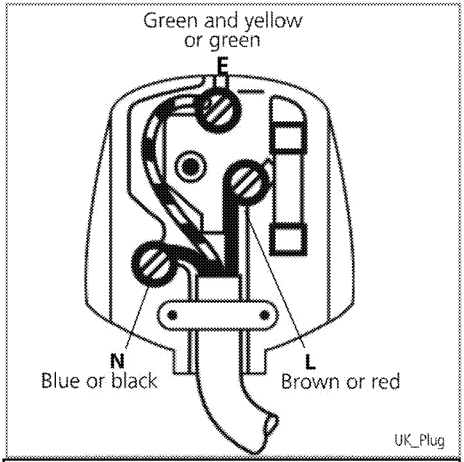

DANGER:
Before starting any work on the electrical installation, disconnect the product from the mains supply.
There is the risk of electric shock!

Connect the power cable into the socket.

Gas connection

DANGER:
Product can be connected to gas supply system only by an authorised and qualified person or technician with licence.
Risk of explosion or toxication due to unprofessional repairs!
Manufacturer shall not be held responsible for damages arising from procedures carried out by unauthorised or unlicensed persons.

DANGER:
Before starting any work on the gas installation, disconnect the gas supply.
There is the risk of explosion!

- Gas adjustment conditions and values are stated on labels (or ion type label).
- In the UK, Gas Safe registered installers (Including the Regions of British Gas) undertake to work to safe and satisfactory standards.

Regulations

The cooker must be installed in accordance with the Gas Safety (Installation and Use) Regulations and the relevant Building Regulations in force.

Your product is equipped for natural gas (NG).

The cooker is designed for UK installation using a flexible connection with tubing in accordance

with the regulations in force. Length of 900mm is recommend.
Make sure that the natural gas valve is readily accessible.
Service Representative will remove the plug during connection and connect your appliance by means of a straight connection device (coupling).

If a flexible hose is used it must not come into contact with the top 150mm/6 inches (hot region) of the rear of the appliance. Do not pass the hose through the (**) hot region behind the oven.

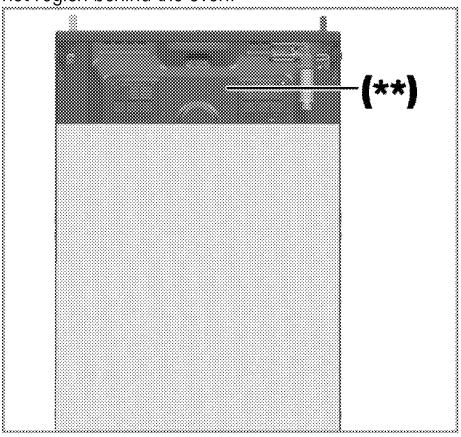

(**) Hot region

If you need to use your appliance later with a different type of gas, you must consult an authorised service centre for the related conversion procedure.

Seal all connections with gas sealant.

1. Turn off the gas supply.
2. Connect safety (gas) hose 5 to the inlet valve of the oven.
3. Connect gas hose with elbow joint 6 .

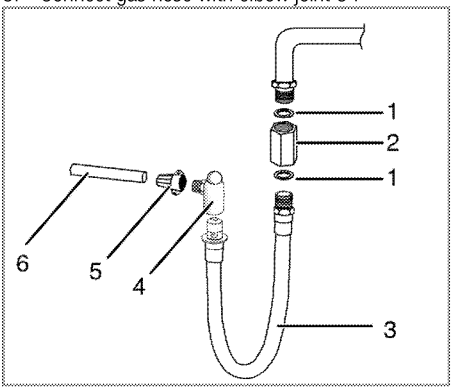

1 Gasket
2 Adapter (optional) with 1/2" outlet
3 Gas (safety) hose
4 Valve with 90° outlet
5 Connection piece
6 Gas supply pipe
7 Silicone gasket

Insert the grill onto the oven

1. Place grill back into the oven in upright position. Insert connecting braces at the bottom of the grill back into the seats *1* at the back of the oven.

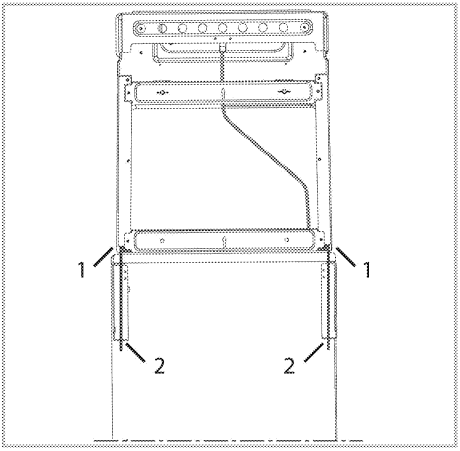

2. Tighten connecting braces with the screws *2* if the grill is in correct position.
3. Connect grill gas pipe *3* . Seal connection with gas sealant.

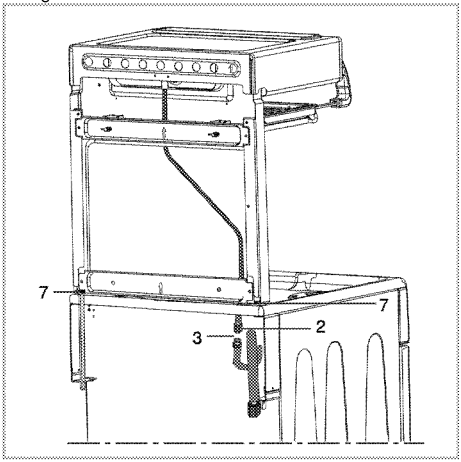

4. Also check if this connection is correct and tight after connection to the gas supply.

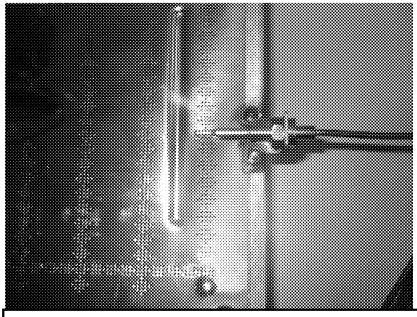

Please note that the positioning and vertical distance between the sensor and the grill burner surface are critical for a sound operation. Therefore maximum attention should be paid to adjust the indicated gap to 5-6 mm after mounting the sensor.

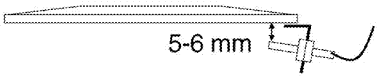

DANGER:
The gas hose must not be clamped, bent or trapped or come into contact with hot parts of the product.
There is the risk of explosion due to damaged gas hose.

- Gas hose must not contact the area above the oven (150 mm from top).

Safety checks.

- Check that the grill gas connection is gas sound when you have completed connecting the cooker to the gas supply. A safety device fitted to the grill prevents a build up of gas if the burner doesn't light or goes out for any reason.
- Press and turn the grill control to the large flame symbol.
- While keeping the control depressed press the ignition button to light the burner.
- Keep the knob depressed for 15 seconds after the burner has lit to override the safety device.
- After 2 minutes at maximum setting, reduce to the small flame symbol and operate for 3 minutes. Check to ensure to flame is maintained during reduced rate operation.
- Switch off the grill by turning the knob to the 0 position.
- When the flame has extinguished, press and turn the grill control to the large flame symbol and release the knob. Do not press the ignition button.
- The safety device will cut off the gas to the grill within 60 seconds.
- * If the flame goes out during the reduced rate operation, check the FFD position has not been disturbed during installation, also the reduced rate flame condition.
- * If auto cut off is not actuated as stated please check that the FFD pipe has not been damaged during installation.

- Push the product towards the kitchen wall.
- Hook safety chain.
- **Adjusting the feet of oven**
  Vibrations during use may cause cooking vessels to move. This dangerous situation can be avoided if the product is level and balanced.
  For your own safety please ensure the product is level by adjusting the four feet at the bottom by turning left or right and align level with the work top.

Final check

1. Open gas supply.
2. Check gas installations for secure fitting and tightness.
3. Ignite burners and check appearance of the flame.

Flame must be blue and have a regular shape. If the flame is yellowish, check if the burner cap is seated securely or clean the burner.

Gas conversion

DANGER:
Before starting any work on the gas installation, disconnect the gas supply.
There is the risk of explosion!

In order to change your appliance's gas type, change all injectors and make flame adjustment for all valves at reduced flow rate position.

- **Gas conversion must only be carried out by a Gas Safe registered installer or service agent.**

Exchange of injector for the burners

1. Take off burner cap and burner body.
2. Unscrew injectors by turning the counter-clockwise.
3. Fit new injectors.
4. Check all connections for secure fitting and tightness.

New injectors have their position marked on their packing or injector table on *Injector table, page 13* can be referred to.

((Varies depending on the product model.))
On some hob burners, the injector is covered with a metal piece. This metal cover must be removed for injector replacement.

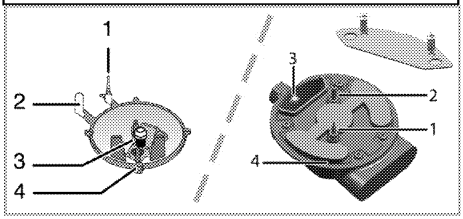

1 Flame failure device (model dependant)
2 Spark plug
3 Injector
4 Burner

Unless there is an abnormal condition, do not attempt to remove the gas burner taps. You must call an Authorised service agent or technician with licence if it is necessary to change the taps.

Reduced gas flow rate setting for hob taps

1. Ignite the burner that is to be adjusted and turn the knob to the reduced position.
2. Remove the knob from the gas tap.
3. Use an appropriately sized screwdriver to adjust the flow rate adjustment screw.

For LPG (Butane - Propane) turn the screw clockwise.
For the natural gas, you should turn the screw **counter-clockwise**once.
» The normal length of a straight flame in the reduced position should be 6-7 mm.

4. If the flame is higher than the desired position, turn the screw clockwise. If it is smaller turn anticlockwise.
5. For the last control, bring the burner both to high-flame and reduced positions and check whether the flame is on or off.

Depending on the type of gas tap used in your appliance the adjustment screw position may vary.

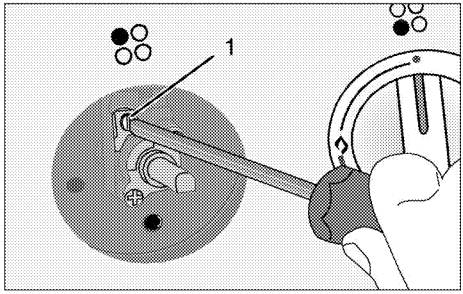

1 Flow rate adjustment screw

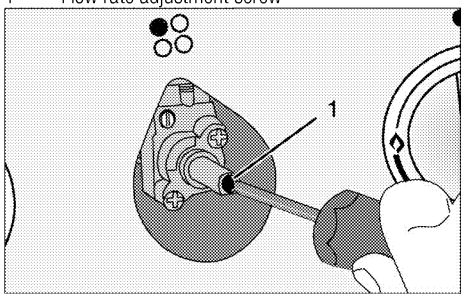

1 Flow rate adjustment screw

Exchange of injector for oven burner

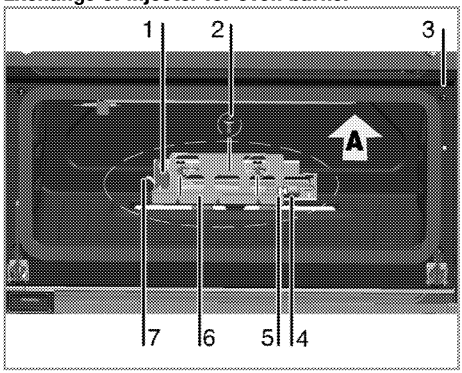

1 Oven burner
2 Screw (3 pieces)
3 Cut-off valve
4 Injector holder
5 Injector
6 Oven burner holder
7 Clips

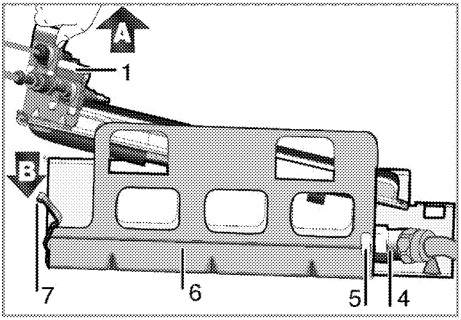

1. Unscrew 3 screws (2) to remove oven burner (1) and oven burner holder (7).
2. Gently pull up burner and holder in “A” direction- be careful with gas connection tube and thermocouple.
3. Push the clips (7) in “B” direction to disassemble oven burner (1) and its holder(6).
4. Unscrew the injector (5) and replace it with appropriate injector, see, *Injector table, page 13* injector table.
5. Conduct the leakage control after replacing the injector.
6. Assemble the oven burner (1) to its holder (6) by pushing the burner on the clips (7) in “B” direction.
7. Mount the oven burner (1) and holder (6) as a group to the cavity by screwing 3 screws (2).

Reduced flow adjustment for the gas oven

For the appropriate functioning of the oven re-checking the by-pass adjustment is extremely important. In order to provide maximum security to the user these operations have to be done with care.

1. Ignite the burner that is to be adjusted and turn the knob to the high flame position.
2. Close the oven door and wait for 10 to 15 minutes until the oven becomes ready for adjustment.
3. Take out the knob
4. After 15 minutes, adjust the oven to the lowest flame position.

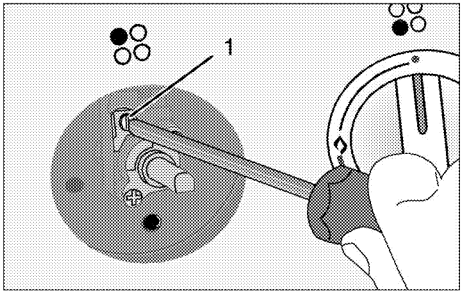

5. Set the flame length to 2 to 3 mm by means of the screw *1* on the oven tap. Turning in clockwise direction reduces the flame, turning counter-clockwise increases the flame.

Future Transportation

- Keep the product's original carton and transport the product in it. Follow the instructions on the carton. If you do not have the original carton, pack the product in bubble wrap or thick cardboard and tape it securely.
- To prevent the wire grill and tray inside the oven from damaging the oven door, place a strip of cardboard onto the inside of the oven door that lines up with the position of the trays. Tape the oven door to the side walls.
- Secure the caps and pan supports with adhesive tape.
- Do not use the door or handle to lift or move the product.

	Do not place any objects onto the product and move it in upright position.
	Check the general appearance of your product for any damages that might have occurred during transportation.

4 Preparation

Tips for saving energy

The following information will help you to use your appliance in an ecological way, and to save energy:

- Use dark coloured or enamel coated cookware in the oven since the heat transmission will be better.
- While cooking your dishes, perform a preheating operation if it is advised in the user manual or cooking instructions.
- Do not open the door of the oven frequently during cooking.
- Try to cook more than one dish in the oven at the same time whenever possible. You can cook by placing two cooking vessels onto the wire shelf.
- Cook more than one dish one after another. The oven will already be hot.
- Defrost frozen dishes before cooking them.
- Use pots/pans with cover for cooking. If there is no cover, energy consumption may increase 4 times.
- Select the burner which is suitable for the bottom size of the pot to be used. Always select the correct pot size for your dishes. Larger pots require more energy.

Initial use

First cleaning of the appliance

The surface might get damaged by some detergents or cleaning materials.
Do not use aggressive detergents, cleaning powders/creams or any sharp objects during cleaning.
Do not use harsh abrasive cleaners or sharp metal scrapers to clean the oven door glass since they can scratch the surface, which may result in shattering of the glass.

1. Remove all packaging materials.
2. Wipe the surfaces of the appliance with a damp cloth or sponge and dry with a cloth.

Initial heating

Heat up the product for about 30 minutes and then switch it off. Thus, any production residues or layers will be burnt off and removed.

WARNING
Hot surfaces cause burns!
Product may be hot when it is in use. Never touch the hot burners, inner sections of the oven, heaters and etc. Keep children away. Always use heat resistant oven gloves when putting in or removing dishes into/from the hot oven.

Gas oven

1. Take all baking trays and the wire grill out of the oven.
2. Close the oven door.
3. Select the highest flame of the gas oven; see *How to use the gas oven, page 24.*
4. Operate the oven about 30 minutes.
5. Turn off your oven; See *How to use the gas oven, page 24*

Smoke and smell may emit for a couple of hours during the initial operation. This is quite normal. Ensure that the room is well ventilated to remove the smoke and smell. Avoid directly inhaling the smoke and the smell that emits.

5 How to use the hob

General information about cooking

Never fill the pan with oil more than one third of it. Do not leave the hob unattended when heating oil. Overheated oils bring risk of fire. **Never attempt to extinguish a possible fire with water!** When oil catches fire, cover it with a fire blanket or damp cloth. Turn off the hob if it is safe to do so and call the fire department.

- Before frying foods, always dry them well and gently place into the hot oil. Ensure complete thawing of frozen foods before frying.
- Do not cover the vessel you use when heating oil.
- Place the pans and saucepans in a manner so that their handles are not over the hob to prevent heating of the handles. Do not place unbalanced and easily tilting vessels on the hob.
- Do not place empty vessels and saucepans on cooking zones that are switched on. They might get damaged.
- Operating a cooking zone without a vessel or saucepan on it will cause damage to the product. Turn off the cooking zones after the cooking is complete.
- As the surface of the product can be hot, do not put plastic and aluminum vessels on it. Such vessels should not be used to keep foods either.
- Use flat bottomed saucepans or vessels only.
- Put appropriate amount of food in saucepans and pans. Thus, you will not have to make any unnecessary cleaning by preventing the dishes from overflowing.
  Do not put covers of saucepans or pans on cooking zones.
  Place the saucepans in a manner so that they are centered on the cooking zone. When you want to move the saucepan onto another cooking zone, lift and place it onto the cooking zone you want instead of sliding it.

Gas cooking

- Size of the vessel and the flame must match each other. Adjust the gas flames so that they will not extend the bottom of the vessel and center the vessel on saucepan carrier.

Using the hobs

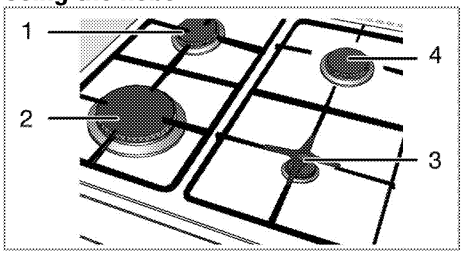

List of advised diameter of pots to be used on related burners.

1 Normal burner 18-20 cm
2 Rapid burner 22-24 cm
3 Auxiliary burner 12-18 cm
4 Normal burner 18-20 cm

Large flame symbol indicates the highest cooking power and small flame symbol indicates the lowest cooking power. In turned off position (top), gas is not supplied to the burners.

Igniting the gas burners

Gas burners are ignited with ignition buttons.

1. Keep burner knob pressed.
2. Turn it counter clockwise to large flame symbol.
3. Press and release the ignition button. Repeat the procedure until the released gas is ignited.
4. Adjust it to the desired cooking power.

Turning off the gas burners

Turn the knob to off (upper) position.

Gas shut off safety system (in models with thermic component)

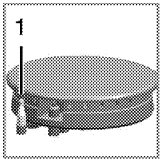

1. Gas shut off safety

As a counter measure against blow out due to fluid overflows at burners, safety mechanism trips and shuts off the gas.

- Push the knob inwards and turn it counter clockwise to ignite.
- After the gas ignites, keep the knob pressed for 3-5 seconds more to engage the safety system.
- If the gas does not ignite after you press and release the knob, repeat the same procedure by keeping the knob pressed for 15 seconds.

DANGER:
Release the button if the burner is not ignited within 15 seconds.
Wait at least 1 minute before trying again.
There is the risk of gas accumulation and explosion!

6 How to operate the oven

General information on baking, roasting and grilling

WARNING
Hot surfaces cause burns!
Product may be hot when it is in use. Never touch the hot burners, inner sections of the oven, heaters and etc. Keep children away. Always use heat resistant oven gloves when putting in or removing dishes into/from the hot oven.

DANGER:
Be careful when opening the oven door as steam may escape.
Exiting steam can scald your hands, face and/or eyes.

Tips for baking

Select the correct shelf position before turning the oven on – don't move oven shelves when hot.

- Always preheat the oven first for 10 minutes to ensure the food is at the correct temperature as soon as it goes into the oven.
- Use good quality baking tins such as non stick or aluminium. Line tins with greaseproof or baking paper to prevent sticking, if necessary.
- Do not fill cake tin more than half full.
- If baking one tray of food or cake, place centrally on the shelf level and centrally in the oven.
- If cooking on more than one level, swop food between the shelves at least halfway through cooking.
- Try not to open the oven door too much during cooking.
- To check if a cake is cooked, insert a skewer or cocktail stick into the centre. If it comes out clean, the cake is done, if it has food stuck to it, continue to cook the cake for a few minutes more and repeat the process.

Tips for roasting

Preheat oven first.

- If possible take meat or poultry out of refrigerator 30 minutes before cooking.
- Weigh meat first and calculate how long it will take to cook.
- Before cooking meat or poultry, lightly coat with butter or oil and season with salt, pepper, herbs, or other seasoning. Place in a roasting dish and use a rack to lift the meat out of its juices. Place dish in centre of oven.
- Turn meat over halfway through cooking.
- If the roasted meat is covered with foil, (it helps to keep the oven clean), always uncover for the last half an hour of cooking to allow browning.
- Remove meat from oven once cooked and stand covered in foil for 10-15 minutes to allow the meat to relax and juices to be reabsorbed which ensures the roast is tender and moist.

Tips for grilling

- Grilling is a quick and healthy way of cooking meat, fish, vegetables and poultry. Flat pieces are particularly suitable for grilling.
- Distribute the pieces to be grilled on the wire shelf or in the baking tray with wire shelf in such a way that the space covered does not exceed the size of the heater.
- Slide the wire shelf or baking tray with grill into the desired level in the oven. If you are grilling on the wire shelf, slide the baking tray to the lower rack to collect fats. Add some water in the tray for easy cleaning.

Foods that are not suitable for grilling carry the risk of fire. Only grill food which is suitable for intensive grilling heat.
Do not place the food too far in the back of the grill. This is the hottest area and fatty food may catch fire.

How to use the gas oven

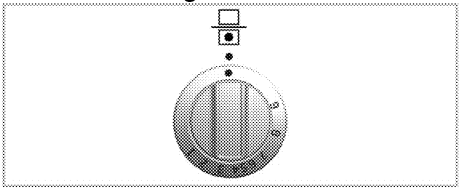

The gas oven is operated by the gas oven control knob. In off position (top) the gas supply is Off.

Switch on the gas oven

The gas oven is ignited with the ignition button.

1. Open oven door.
2. Keep gas oven control knob pressed and turn it **counterclockwise**.
3. Press ignition button and release it again.
4. Keep the gas oven control knob pressed for 3 to 5 seconds.

» Repeat the process until the emanating gas is ignited.

5. Keep the gas oven control knob pressed for another 3 to 5 seconds. Be sure that gas has ignited and flame is present.
6. Select the desired baking power/ gas mark.
7. If there is no electricity; ignite the gas with the gas lighter from the ignition control hole.

DANGER:
There is the risk of gas compression and explosion!
Do not attempt to ignite the gas more that 15 seconds. If the burner is not ignited within 15 seconds, turn off the knob and wait for 1 minute. Ventilate the room before reattempting to ignite the burner. There is the risk of gas compression and explosion!

Switch off the gas oven

1. Turn gas oven control knob to off position (top).

Gas level temperature conversion chart

Gas level	1	2	3	4	5	6	7	8	9
Temperature in °C	130	140	150	170	180	200	220	250	280
Temperature in °F	266	285	302	338	356	395	430	482	536

Cooking times table

1st rack of the oven is the **bottom** rack.

Maximum load capacity of oven tray: 4 kg (8.8 lb).

The timings in this chart are meant as a guide. Timings may vary due to temperature of food, thickness, type and your own preference of cooking.

Stand dishes on a baking sheet to prevent spillages onto oven base and help keep oven clean.

Baking and roasting

Food	Preheating *	Insertion level	Control knob position	Cooking time
Roast beef; Sirloin, topside, toprump, rib	10 min.	2	5...6	20...40 min. thenper 450 g/lb + 30 min. Medium 20 min. thenper 450 g/lb + 20 min., Well done 25 min. thenper 450 g/lb + 25 min.
Roast Lamb; Leg, shoulder, rack, breast, whole neck fillet	10 min.	2	5...6	20...40 min. thenper 450 g/lb + 20 min.
Roast pork; loin, shoulder, leg	10 min.	2	5...6	20...40 min. thenper 450 g/lb + 25 min.
Roasted chicken	10 min.	2	6...7	30...40 min. thenper 450 g + 20 min.
Roast turkey	10 min.	2	6...7	30...40 min. thenper 450 g + 25 min.
Casseroles	–	2	4...5	2...3 hours
Whole fish	10 min.	2	4...5	25...35 min.$
Pasta bake	10 min.	3	5	30...40 min.$
Fruit pies (260 mm)	10 min.	3	5...6	45...60 min. $
Pizza	10 min.	4	6	30...50 min., depending on thickness $
Small cakes - One tray	10 min.	3	4...5	30...50 min.
Victoria sandwich	10 min.	3	4...5	30...50 min.
Biscuits	10 min.	3	5	15...25 min.
Scones	10 min.	3	5	15...25 min.
Rich fruit cake (20-22cm)	10 min.	3	3	3...4 hours

*** at control knob position 7 / $ depending on quantity / # depending on size**

Using the clock as an alarm

The alarm clock has no influence on the functions of the oven. It is only used as a warning. For example, this is useful when you want to turn food in the oven at a certain point of time. Alarm clock will give a signal once the time you set is over.

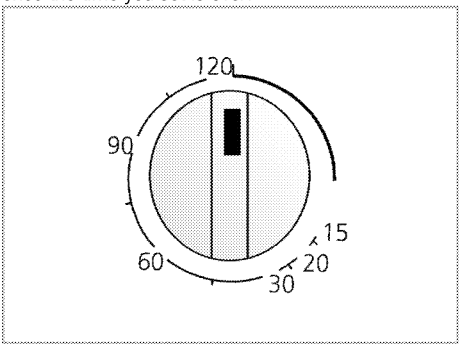

Setting the alarm clock

1. Turn the Time Adjustment knob clockwise to determine for how long the alarm will sound.
2. The knob will turn counterclockwise at the end of the cooking time and the alarm will sound. Alarm clock does not turn off the oven.

Turn the Function knob counter clockwise to off position to turn off the oven.

How to use the gas grill

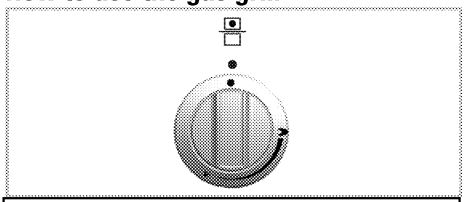

WARNING

Parts may become hot when the grill is in use, children must be kept away.

The maksimum load must not exceed 2.5 kg (5.5 lbs).

Switching on the grill

Gas grill is ignited with the ignition button.

1. Position the rack in a suitable position.
2. Press and turn the control knob anticlockwise to the large flame symbol.
3. Push the ignition button to light the burner.

» Repeat the procedure until the gas is ignited.

4. Allow the grill to preheat for 2 minutes.
5. The grill can be operated at the variable setting.

DANGER

There is the risk of gas compression and explosion!

Do not attempt to ignite the gas more that 15 seconds. If the burner is not ignited within 15 seconds, turn off the knob and wait for 1 minute. Ventilate the room before reattempting to ignite the burner. There is the risk of gas compression and explosion!

Switching off the grill

1. To switch off turn the knob clockwise to the off position.

- If the burner doesn't light the first time, press the ignition button once or twice again. If it still doesn't light, turn off and wait for 1 minute to allow gas to disperse before trying again.
- Do not hold the control in for more than 15 seconds.
- Ensure the food is correctly positioned on the grill pan under the grill burner.
- Oiling the grill rack prevents meat sticking on the wires.
- Do not line the grill pan with aluminium foil. This will result in an increase in temperatures and could result in damage to your cooker or increased risk of fire.

- Always remove the grill pan from the compartment as soon as you have finished grilling, it makes the pan much easier to clean. When grilling, if meat is placed too near the grill burner, the fat may ignite.

Using of grill pan

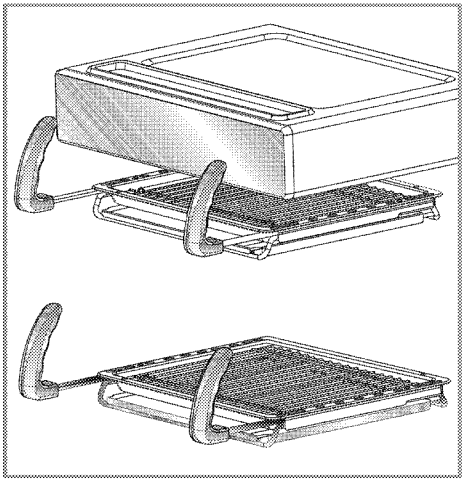

WARNING
Always use an oven glove to protect your hand when using the grill as all metal parts can become very hot.

Always take care not to touch hot surfaces when using the grill pan.

Grilling guidelines

For thicker foods requiring longer cooking, turn the control to a lower setting after the initial sealing on both sides. The thicker the food, the lower the control should be set. When grilling thicker food, the grill rack should be turned over to its lowest position.

7 Maintenance and care

General information

Service life of the product will extend and the possibility of problems will decrease if the product is cleaned at regular intervals.

DANGER:
Disconnect the product from mains supply before starting maintenance and cleaning works.
There is the risk of electric shock!

DANGER:
Allow the product to cool down before you clean it.
Hot surfaces may cause burns!

- Clean the product thoroughly after each use. In this way it will be possible to remove cooking residues more easily, thus avoiding these from burning the next time the appliance is used.
- No special cleaning agents are required for cleaning the product. Use warm water with washing liquid, a soft cloth or sponge to clean the product and wipe it with a dry cloth.
- Always ensure any excess liquid is thoroughly wiped off after cleaning and any spillage is immediately wiped dry.
- Do not use cleaning agents that contain acid or chloride to clean the stainless or inox surfaces and the handle. Use a soft cloth with a liquid detergent (not abrasive) to wipe those parts clean, paying attention to sweep in one direction.

The surface might get damaged by some detergents or cleaning materials.
Do not use aggressive detergents, cleaning powders/creams or any sharp objects during cleaning.
Do not use harsh abrasive cleaners or sharp metal scrapers to clean the oven door glass since they can scratch the surface, which may result in shattering of the glass.

Do not use steam cleaners to clean the appliance as this may cause an electric shock.

Cleaning the hob

Gas hobs

1. Remove and clean the saucepan carriers and burner caps.
2. Clean the hob.
3. Install the burner caps and make sure that they are seated correctly.
4. When installing the upper grills, pay attention to place the saucepan carriers so that the burners are centered.

Cleaning the control panel

Clean the control panel and knobs with a damp cloth and wipe them dry.

Do not remove the control buttons/knobs to clean the control panel.
Control panel may get damaged!

Cleaning the oven

To clean the side wall

(This feature is optional. It may not exist on your product.)

1. Remove the front section of the side rack by pulling it in the opposite direction of the side wall.
2. Remove the side rack completely by pulling it towards you.

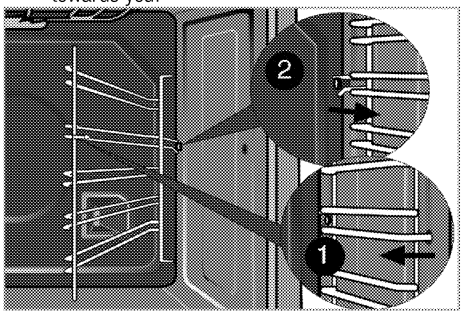

Catalytic walls

(This feature is optional. It may not exist on your product.)

The inner side walls (A) and/or the rear wall (B) of your product may be coated with catalytic enamel. Catalytic walls have a light matte colour and a porous surface. Catalytic walls of the oven should not be cleaned. Porous surfaces of the catalytic walls are automatically cleaned by absorbing and converting the spilled oil (steam and carbon dioxide).

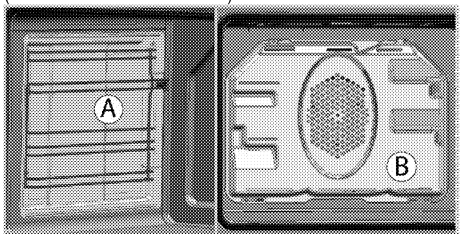

Clean oven door

To clean the oven door, use warm water with washing liquid, a soft cloth or sponge to clean the product and wipe it with a dry cloth.

> Don't use any harsh abrasive cleaners or sharp metal scrapers for cleaning the oven door. They could scratch the surface and destroy the glass.

Removing the oven door

1. Open the front door (1).
2. Open the clips at the hinge housing (2) on the right and left hand sides of the front door by pressing them down as illustrated in the figure.

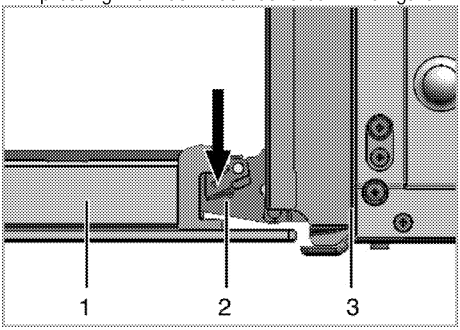

1 Front door
2 Hinge
3 Oven

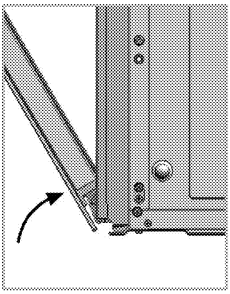

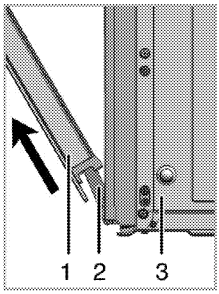

3. Move the front door to half-way.
4. Remove the front door by pulling it upwards to release it from the right and left hinges.

> Steps carried out during removing process should be performed in reverse order to install the door. Do not forget to close the clips at the hinge housing when reinstalling the door.

Removing the door inner glass

(This feature is optional. It may not exist on your product.)

Open the oven door.

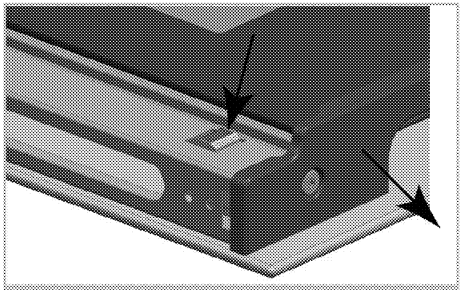

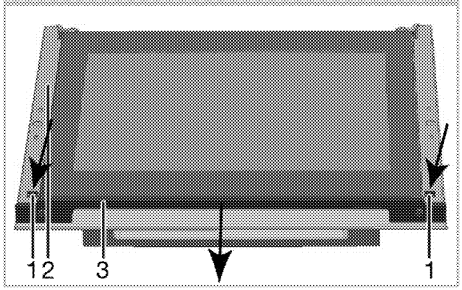

1 Tab
2 Frame
3 Profile

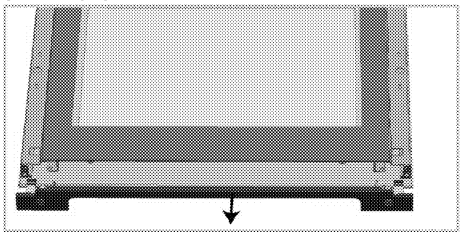

As illustrated in the figures above, press on the tabs (1) and pull the profile (3) towards yourself simultaneously to remove the profile attached to the upper side of the front door.

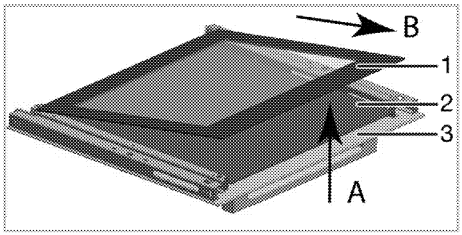

1 Innermost glass panel
2 Inner glass panel*
3 Outer glass panel
* (It may not exist on your product.)

As illustrated in the figure, raise the innermost glass panel (1) slightly in direction **'A'** and pull it out in direction **'B'**.

If your product is equipped with an inner glass panel;

Pull the glass holder connecting elements in the middle as illustrated in the figure to free them from the glass panels.

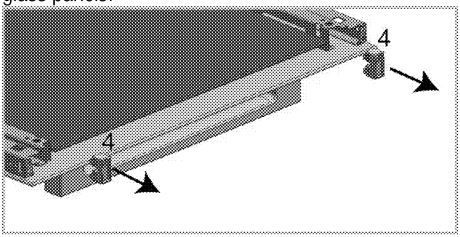

4 Glass holder connecting element*
* (It may not exist on your product.)

Repeat the same procedure to remove the inner glass panel (2). The first step to regroup the door is reinstalling inner glass panel (2).
As illustrated in the figure, place the glass panel so that it is inserted to the plastic slot.

Otherwise the glass panel will not seat completely and may get exposed to vibration and break.

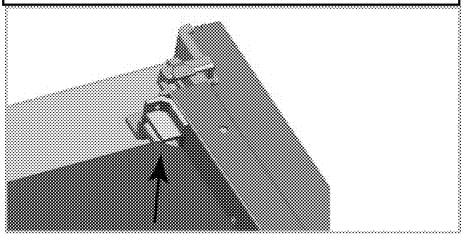

When installing the innermost glass panel (1), make sure that the printed side of the panel faces towards the inner glass panel.
It is important that the lower corners of the innermost glass panel are seated into the plastic slots.

Otherwise the glass panel will not seat completely and may get exposed to vibration and break.

Please remember to place the glass holding connecting parts into their slots.
Finally, press on the tabs of the profile to make them seat into their slots again.

Replacing the oven lamp

DANGER:
Before replacing the oven lamp, make sure that the product is disconnected from mains and cooled down in order to avoid the risk of an electrical shock.
Hot surfaces may cause burns!

The oven lamp is a special electric light bulb that can resist up to 300 °C. See *Technical specifications, page 13* for details. Oven lamps can be obtained from Authorised Service Agents or technician with licence.

Position of lamp might vary from the figure.

The lamp used in this appliance is not suitable for household room illumination. The intended purpose of this lamp is to assist the user to see foodstuffs.

The lamps used in this appliance have to withstand extreme physical conditions such as temperatures above 50 °C.

If your oven is equipped with a round lamp:

1. Disconnect the product from mains.
2. Turn the glass cover counter clockwise to remove it.

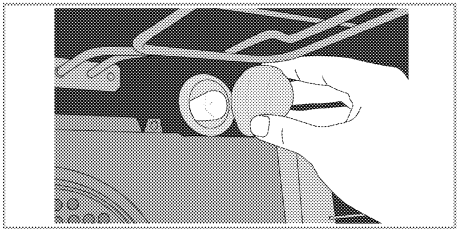

3. If your oven lamp is of type (A) shown in the figure below, remove it by rotating as shown and replace it. If it is of type (B), pull and remove it as shown in the figure and replace it.

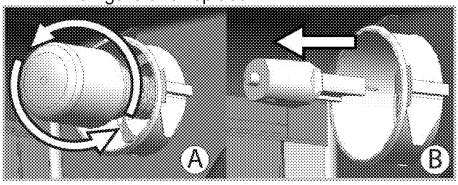

4. Install the glass cover.

8 Troubleshooting

Oven emits steam when it is in use.

- It is normal that steam escapes during operation. >>> *This is not a fault.*

Product emits metal noises while heating and cooling.

- When the metal parts are heated, they may expand and cause noise. >>> *This is not a fault.*

There is no ignition spark.

- No current. >>> *Check fuses in the fuse box.*

There is no gas.

- Main gas valve is closed. >>> *Open gas valve.*
- Gas pipe is bent. >>> *Install gas pipe properly.*

Burners are not burning properly or at all.

- Burners are dirty. >>> *Clean burner components.*
- Burners are wet. >>> *Dry the burner components.*
- Burner cap is not mounted safely. >>> *Mount the burner cap properly.*
- Gas valve is closed. >>> *Open gas valve.*
- Gas cylinder is empty (when using LPG). >>> *Replace gas cylinder.*

Baking takes too long.

Pipe pressure is low. >>> *Adjust a higher gas mark.*

Consult the Authorised Service Agent or technician with licence or the dealer where you have purchased the product if you can not remedy the trouble although you have implemented the instructions in this section. Never attempt to repair a defective product yourself.

9 Guarantee Details

Your new Beko product is guaranteed against faulty materials, defective components or manufacturing defects. The guarantee starts from the date of original purchase of the product for a period of twelve (12) months unless Beko plc (the "Manufacturer") agrees to extend the guarantee for the product in writing. If you have any questions about the guarantee on your product(including how long it is valid), please contact your retailer or our Call Centre on 0333 207 9710.
This guarantee does not in any way diminish or affect your statutory rights in connection with the product. This guarantee is in addition to your statutory rights as a consumer. If you have any questions about these rights, please contact the retailer from which you purchased the product. In certain circumstances, it is possible that your statutory rights may offer additional or higher levels of protection than those offered under the terms of this guarantee.

What is covered by this guarantee?

- Repairs to the product required as a result of faulty materials, defective components or manufacturing defects.
- Functional replacement parts to repair a product.
- The costs of a Beko Approved Engineer to carry out the repair.

What is not covered?

- Transit and delivery damage.
- Cabinet or appearance parts, including but not limited to control knobs, flaps and handles.
- Accessories and/or consumable items including but not limited to ice trays, scrapers, cutlery baskets, filters and light bulbs.
- Repairs necessary as a direct or indirect result of:
  - Accidental damage, misuse or abuse of a product.
  - An attempted repair of a product by anyone other than a Beko authorised repairer.
  - Installation or use of a product where such installation or use fails to meet the requirements contained in this guarantee or the User Instructions Booklet.
- Repairs to a product operated at any time on commercial or non-residential household premises (unless we have previously agreed to the installation environment).

This guarantee is limited to the cost of repairing the product. To the extent permitted by law, the Manufacturer does not accept and will not be held liable for any financial loss incurred in connection with the failure of any product to operate in accordance with the expected standards. Such financial loss includes but is not limited to loss arising from:

- Time taken off work.
- Damaged food, clothing or other items.
- Meals taken at restaurants or from takeaways.
- General compensation for inconvenience.

Important Notes

- Your product is designed and built for domestic household use only.
- The guarantee will automatically be void if the product is installed or is used in commercial or non-residential domestic household premises, unless we have previously agreed to the installation environment.
- The product must be correctly installed, located and operated in accordance with the instructions contained in the User Instructions Booklet provided with your product.
- Professional installation by a qualified Electrical Domestic Appliance Installer is recommended for all Washing Machines, Dishwashers and Electric Cookers (as incorrect installation may result in you having to pay for the cost of repairing the product).
- Gas Cookers must be professionally installed by a Gas Safe (or Gas Networks Ireland for Republic of Ireland) registered gas installer.

- This guarantee is given in respect of products purchased and used within the United Kingdom and the Republic of Ireland.
- This guarantee is effective from the initial date of purchase of a new product from an authorised retailer and will be void if the product is resold.
- This guarantee does not apply to graded sales (where the product is purchased as a “second”).
- Possession of a copy of these terms and conditions does not necessarily mean that a product has the benefit of this guarantee. If you have any questions, please call our Call Centre on the number set out above.
- The Manufacturer reserves the right to terminate the guarantee if its staff or representatives are subjected to physical or verbal abuse in the course of carrying out their duties.
- Optional extras, where available (i.e. extendable feet) are supplied on a chargeable basis only.

Does Beko offer replacements?

This is a repair-only guarantee. On occasion, the Manufacturer may at its sole discretion, replace your product with a new product instead of carrying out a repair. Where a replacement is offered, this would normally be an identical model but when this is not possible, a model of similar specification will be provided. The Manufacturer will cover the costs and arrange for the delivery of the new product and for the return of the old product. Any costs related to disconnecting the faulty product and installing the replacement product will not be borne by the Manufacturer unless previously agreed to in writing. The original guarantee will continue to apply to the replacement product; the new product will not come with a new guarantee.

When will the repair take place?

Our Engineers work Monday to Friday 9.00am to 5.00pm.Appointments outside these hours may be possible at the sole discretion of the Manufacturer but cannot be guaranteed. Whilst our Engineers will endeavour to minimize inconvenience and to meet requests for specific timed appointments, this cannot be guaranteed. We will not be liable for delays or if it is unable to carry out a repair because a convenient appointment cannot be arranged.

Will there be any charge for the repairs?

It is your responsibility to provide evidence to the Engineer that your product is covered by this guarantee with a proof of purchase. The Manufacturer reserves the right to charge for the reasonable cost of any service call if:

- You cannot provide evidence that your product is covered by this guarantee.
- Where a service call has been made and the engineer finds that there is no fault with your product.
- That your product has not been installed or operated in accordance with the User Instructions Booklet.
- That the fault was caused by something other than faulty materials, defective components or manufacturing defects.
- For missed appointments.

Payment of these costs are due immediately upon the Engineer providing you with an invoice. The Manufacturer reserves the right to terminate the guarantee if you fail to pay the costs for the service call in a timely manner.

If you are a resident of the United Kingdom, this guarantee will be governed by English law and subject to the English Courts, save where you live in another part of the United Kingdom, in which case the law and courts of that location will apply.

If you are resident in the Republic of Ireland, this guarantee will be governed by Irish law and the Irish courts will have jurisdiction.

HOW TO OBTAIN SERVICE

Please keep your purchase receipt or other proof of purchase in a safe place; you will need to have it should the product require attention under guarantee.

It will be useful if you complete the details below, as it will help us assist you when requesting service(the model number is printed on the Instruction Booklet and the serial number is printed on the Rating Label affixed to the appliance).Recording of these details alone will not count as proof of purchase. A valid proof of purchase is required for under guarantee service.

The area around the product must be easily accessible to the Engineer without the need for cabinets or furniture being removed.

It is your responsibility to ensure our Engineers have a clean and safe environment to carry out any repairs.

.....

Model No:

Serial No:

Retailer:

Date of purchase:

.....

For service under guarantee simply telephone the appropriate number below:

UK Mainland & Northern Ireland: 0333 207 9710 or customerservice@support.Beko.co.uk

Republic of Ireland: 01 862 3411 or customerservice@support.Beko.ie

Register your appliance: For UK registrations visit beko.co.uk/register and for the Republic of Ireland beko.ie/register.

Before requesting service please check the troubleshooting guide in the Operating Instructions as a charge may be levied where no fault is found even though your product may still be under guarantee.

Service once the manufacturers guarantee has expired

If you have purchased an extended guarantee please refer to the instructions contained within the extended guarantee agreement document, otherwise please call the appropriate number above where service can be obtained at a charge.

Should you experience any difficulty in obtaining service contact the Beko Customer Helpline on Tel: 0333 207 9710 or e-mail: CustomerService@support.beko.co.uk

.....

This guarantee is provided by Beko plc. Beko House, 1 Greenhill Crescent, Watford, Herts, WD18 8QU. Beko plc is registered in England and Wales with company registration number 02415578.